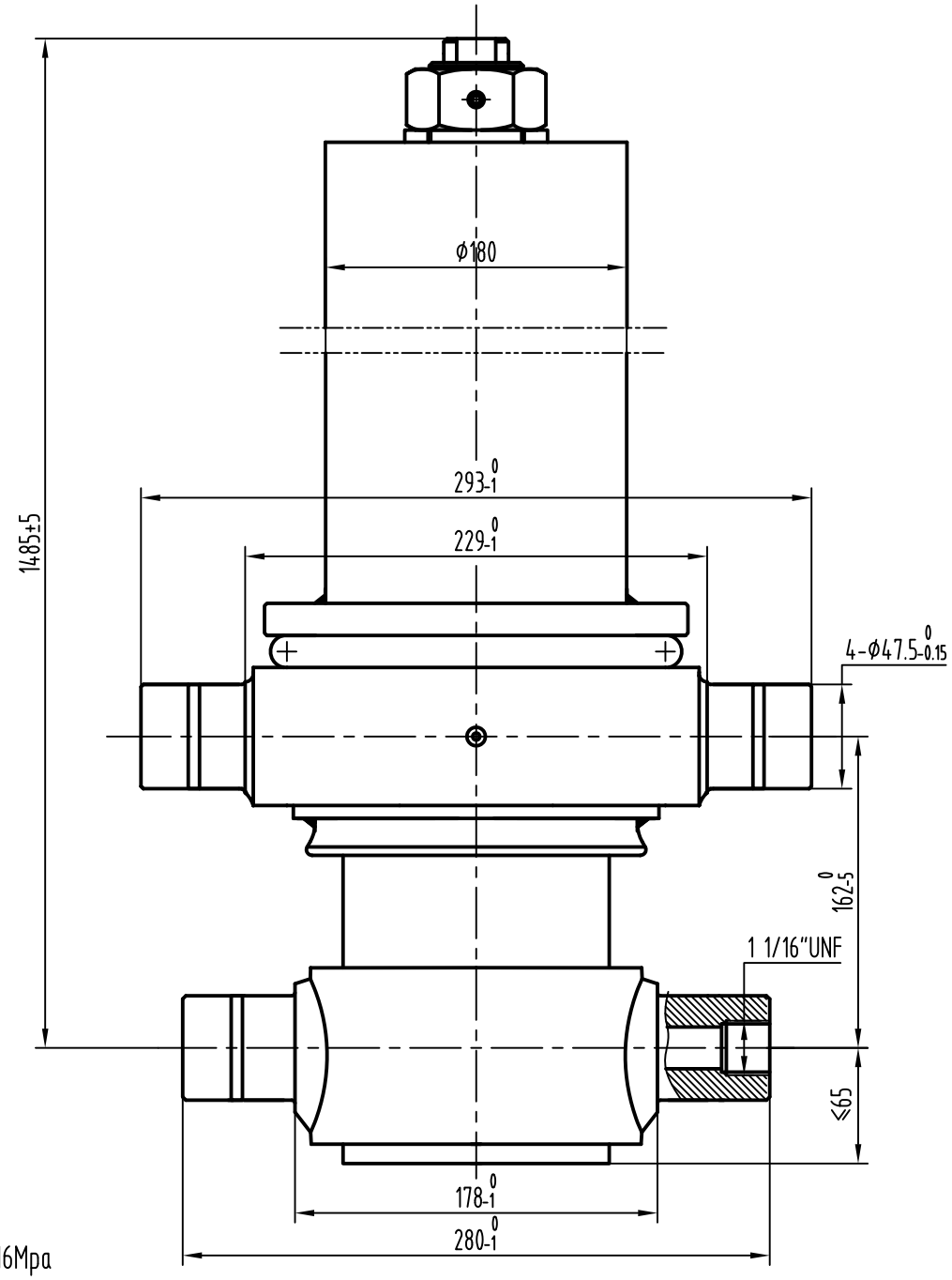

instruction:

1.rated pressure:16Mpa

2.diameter for every stage:129/110/91mm

3.stroke:3460mm

4.after the test, Non mating surface should be painted in color.(except flange parts, chroming parts). even painting, no droping, no sagging.

5.Others accomplish according to the standard QC/T460-2010<<cylinder for dump truck technology>>

Mark	Number of mark	Subarea	Change file No.	Signature	Date

Designed			Standard		
Drawn					
Checked					
Craft			Approved		

AKT5.5-3-136

Phase mark	Weight	scale
		1:3

Sheet OF

Akaliko by Rockmac

Single acting telescopic cylinder

3TG-E129×3460