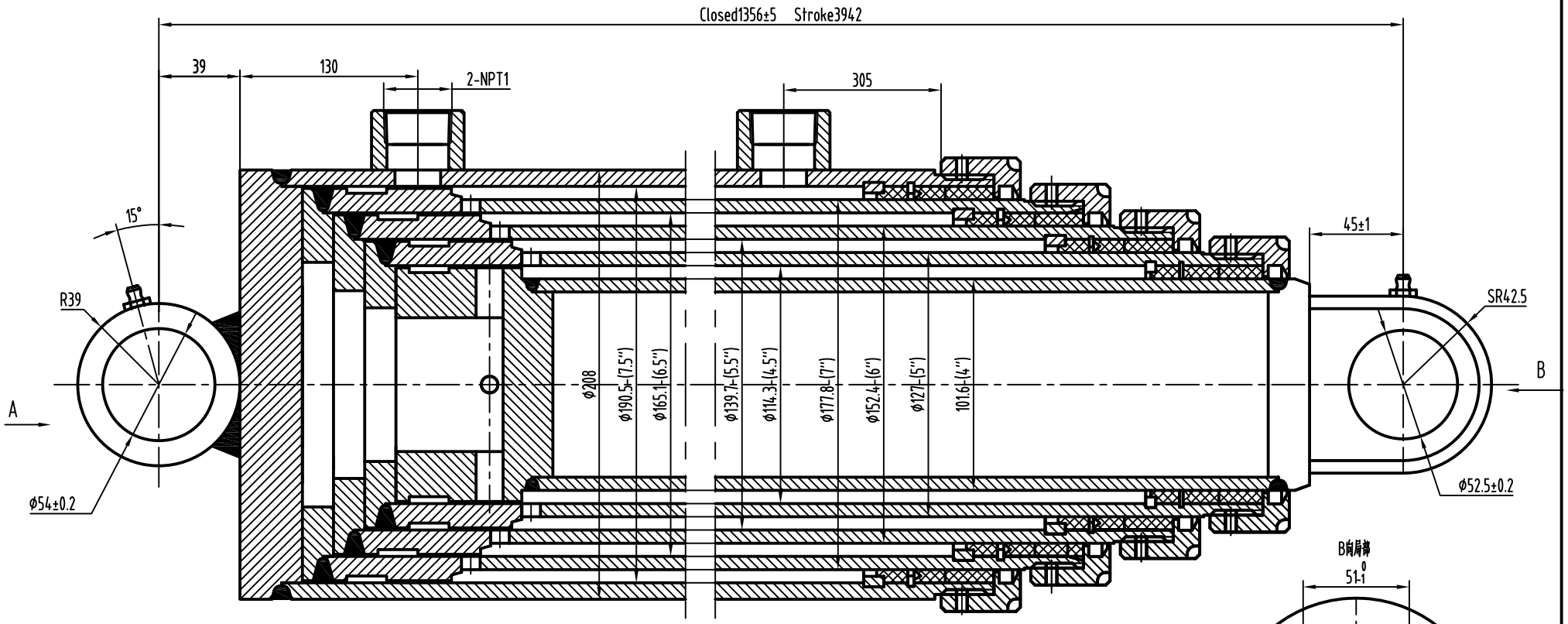

A向局部缩放

1:2

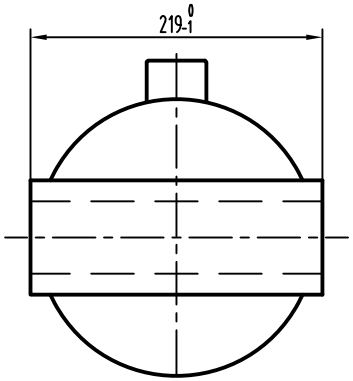

B向局部

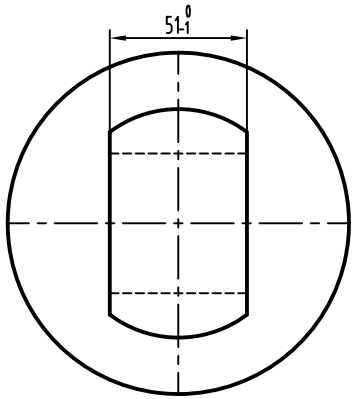

instruction:

1.rated pressure:14Mpa

2.stroke:3942mm

3.after the test, Non mating surface should be painted in color.(except flange parts, chroming parts). even painting, no droping, no sagging.

4.Others accomplish according to the standard QC/T460-2010<<cylinder for dump truck technology>>

Mark	Number of mark	Subarea	Change file No.	Signature	Date

Designed			Standard		
Drawn					
Checked					
Craft			Approved		

AKP74-156-A
(AK74-4401-156)

Akaliko by Rockmac

Single acting telescopic cylinder

Phase mark	Weight	scale
		1:2

Sheet OF

4-177.8×3942